PRODUCTION

SUBJECT TO EAR, ECCN EAR99 AND RELATED EXPORT CONTROL RESTRICTIONS

REVISIONS						
SHEET	ZONE	REV	ECO NO	DESCRIPTION	DATE	REV BY
-	-	02	506580	ADDED .218 ORIFICE CALLOUT AND NOTE	2017-02-14	REH
-	-	03	508581	NOTE 4 VCC MODELS ONLY WAS *.218 ORIFICE FOR VCC+VSD MACHINES ONLY. ADDED "SEE NOTE 4" TO ITEM 27. REMOVED SOL 7 FROM TABLE.	2017-12-13	AMH
-	-	04	511503	ADDED TEMP SWITCH. UPDATED SHEET FORMAT.	2019-01-30	AMH

NOTES:

1. SECTION BETWEEN LETTERED POINTS ARE TO BE REPLACED WITH CORRESPONDING OPTION PICTURED BELOW, AS REQUIRED BY FACE OF ORDER.
2. OPTIONAL HEAT TRACE IS APPLIED ONLY TO CONTROL AND MOISTURE DRAIN LINES AND USED ONLY WITH STAINLESS STEEL TUBING.
3. PARTS VARY BY MODEL.
4. VCC MODELS ONLY.

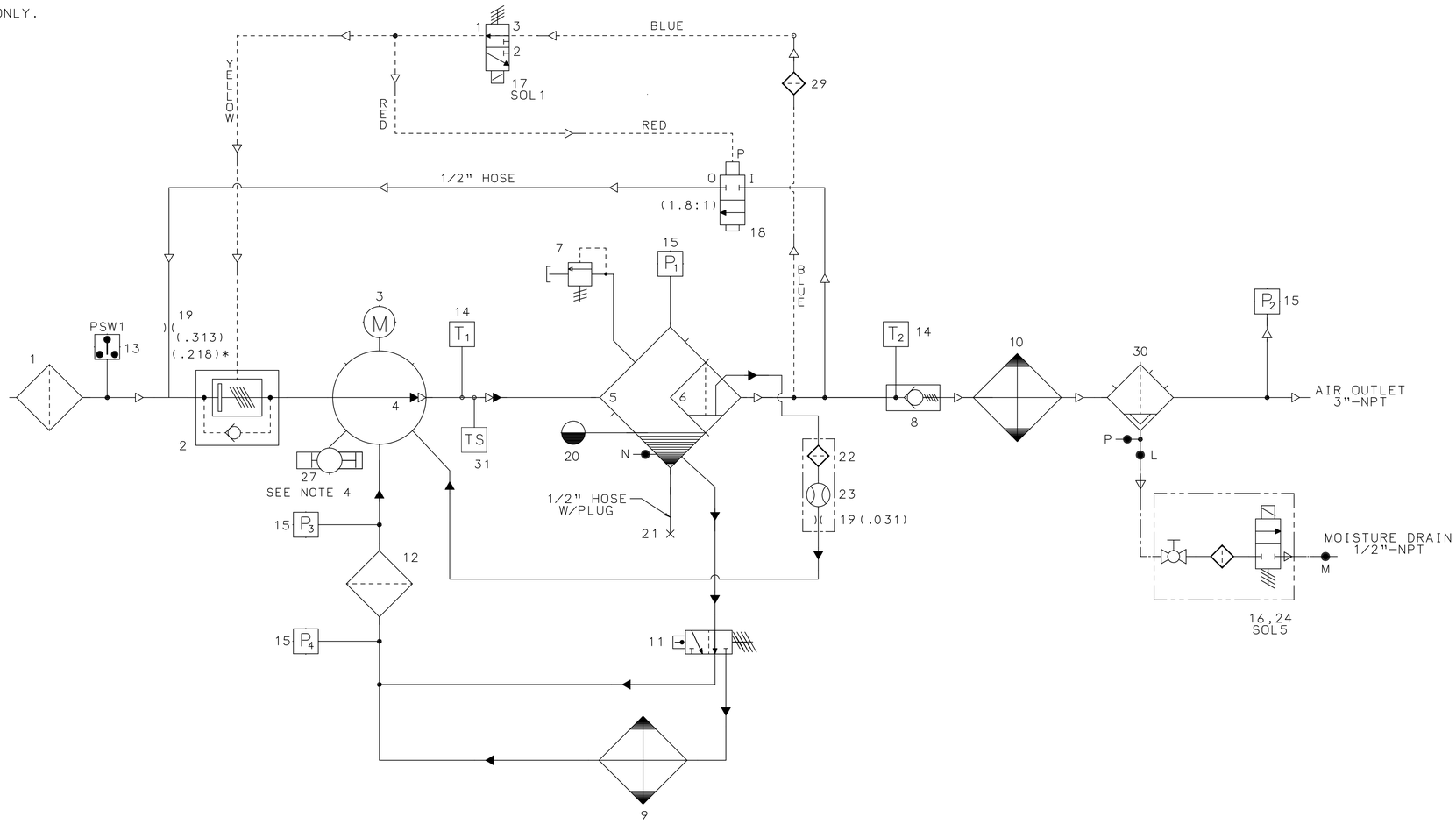

ITEM	PART NO.	DESCRIPTION	QTY
31	–	TEMP SWITCH FOR CE ONLY	1
30	–	SEP, H2O	1
29	–	STRAINER	1
28	–	HTR, SUMP	1
27	–	VLV, SPRIAL	1
26	–	HTR, ZL	1
25	–	VLV, BALL/STNR COMBO	1
24	–	DRN, ZERO LOSS	1
23	–	SIGHTGLASS, SCAVENGE	1
22	–	FILTER, SCAVENGE	1
21	–	DRN, SEP TANK	1
20	–	PLUG, SIGHT GLASS	1
19	–	ORF	2
18	–	VLV, BLOWDOWN	1
17	–	VLV, SOL 3WNO	1
16	–	VLV, DRAIN	1
15	–	XDCR, PRESS	4
14	–	P, THERMISTER	2
13	–	SW, VAC	1
12	–	FLTR, COMPR OIL	1
11	–	ELEM, THERMAL VLV	1
10	–	CLR, AIR	1
09	–	CLR, OIL	1
08	–	VLV, MIN PRESS	1
07	–	VLV, RELIEF	1
06	–	ELEM, AIR/OIL SEP	1
05	–	TNK, OIL SEP	1
04	–	COMPR	1
03	–	MOTOR	1
02	–	VLV, AIR INLET	1
01	–	FLTR, AIR INLET	1

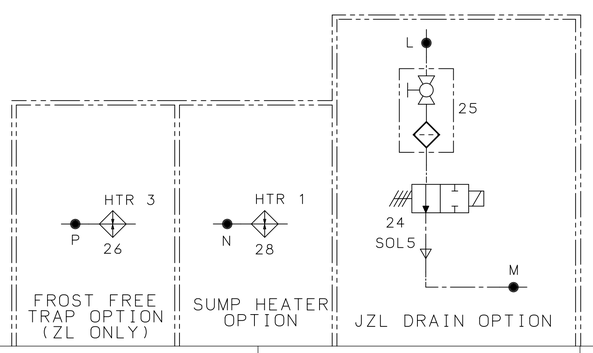

- CUSTOMER FURNISHED LINE
- WATER LINE
- CONTROL LINE
- FLUID LINE
- AIR/FLUID LINE
- TEMP. CONTROL PROBE
- AIR LINE

COMPONENT	DESCRIPTION
P1	WET SUMP PRESSURE
P2	LINE PRESSURE
P3	INJECTION FLUID PRESSURE
P4	HIGH PRESSURE SIDE OF FLUID FILTER
PSW1	INLET FILTER VACUUM SWITCH
SOL1	LOAD/UNLOAD SOLENOID VALVE
SOL5	COMBO DRAIN/JZL DRAIN SOLENOID VALVE
T1	WET DISCHARGE TEMPERATURE
T2	DRY DISCHARGE TEMPERATURE
HTR1	SUMP HEATER
HTR3	TRAP HEATER
TS	TEMP SWITCH (FOR CE MACHINES)

TOLERANCES UNLESS OTHERWISE SPECIFIED

ALL DIMENSIONS ARE IN INCHES

ONE DECIMAL PLACE	±.1
TWO DECIMAL PLACES	±.06
THREE DECIMAL PLACES	±.015
ANGULAR DIMENSION	±1.0°
HOLE DIAMETER	±.03

SULLAIR® A Hitachi Group Company

DESIGNED	REH
DRAWN	REH
ENGINEER	-
STANDARDS	-
SUPERVISOR	-
MANAGER	-
DATE	2008-07-01

MATERIAL	
FINISH SPEC	
WEIGHT	LBS
PROD CODE	X01B
SHEET	1 OF 1

DWG,P&I
LS110 VCC / VSD

DWG NO 02250225-400 REV 04

SIZE D

THIRD ANGLE PROJECTION

THIS DOCUMENT IS THE PROPERTY OF SULLAIR. YOU MAY NOT POSSESS, USE, COPY OR DISCLOSE THIS DOCUMENT OR ANY INFORMATION IN IT FOR ANY PURPOSE, INCLUDING WITHOUT LIMITATION, NO DESIGN, MANUFACTURE OR SERVICE PARTS OR OBTAIN ANY GOVERNMENTAL APPROVAL TO DO SO, WITHOUT SULLAIR'S EXPRESSED WRITTEN PERMISSION. NEITHER RECEIPT NOR POSSESSION OF THIS DOCUMENT ALONE, FROM ANY SOURCE, CONSTITUTES A GRANT OF ANY RIGHT TO DISCLOSE, REPRODUCE, OR USE IT FOR ANY PURPOSE WITHOUT SULLAIR'S EXPRESSED WRITTEN PERMISSION IS NOT AUTHORIZED AND MAY RESULT IN CRIMINAL AND/OR CIVIL LIABILITY.

PRODUCTION