SUBJECT TO EAR, ECCN EAR99 AND
RELATED EXPORT CONTROL RESTRICTIONS

| REVISIONS | | | | | | |
|---|---|---|---|---|---|---|
| SHEET | ZONE | REV | ECO NO | DESCRIPTION | DATE | REV BY |
| - | - | 01 | 507573 | ADD COG TO DRAWING | 2017-07-19 | BC/ECA |
| | E3 & F4. | 02 | 509727 | ADDED COOLER EXHAUST LOCATION DIMS 14.93 & 25.35; UPDATED DWG FORMAT. | 2018-05-15 | HCL/APS |

NOTES:

1. ALLOW 4.00 FEET [1.25 METERS] MINIMUM CLEARANCE AROUND MACHINE FOR ACCESS AND FREE CIRCULATION OF AIR.
2. A FOUNDATION OR MOUNTING CAPABLE OF SUPPORTING THE WEIGHT OF PACKAGE, AND RIGID ENOUGH TO MAINTAIN THE COMPRESSOR FRAME LEVEL IS REQUIRED. THE COMPRESSOR FRAME MUST BE LEVELLED AND SECURED BETWEEN THE FRAME AND THE FOUNDATION. NO PIPING LOADS ARE PERMITTED AT EXTERNAL CONNECTIONS.
3. ALL DIMENSIONS ARE ± .50" [12.7MM].
4. RECOMMENDED INCOMING CUSTOMER POWER SUPPLY IS SHOWN ON DRAWING.
5. ALL DIMENSIONS SHOWN IN INCHES WITH MILLIMETER DIMENSIONS IN PARENTHESES.

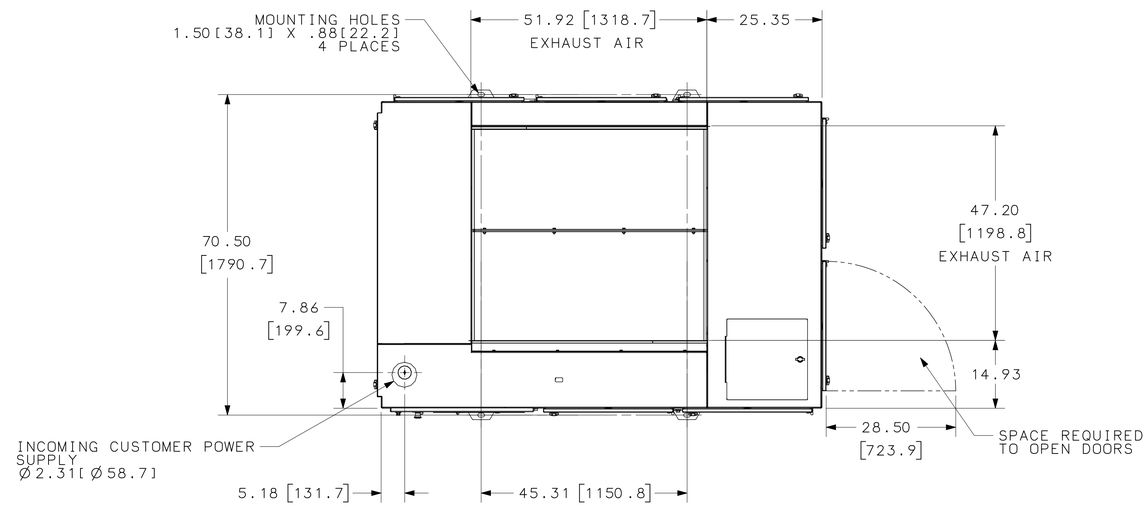


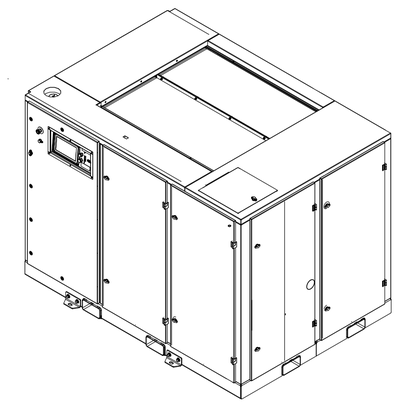

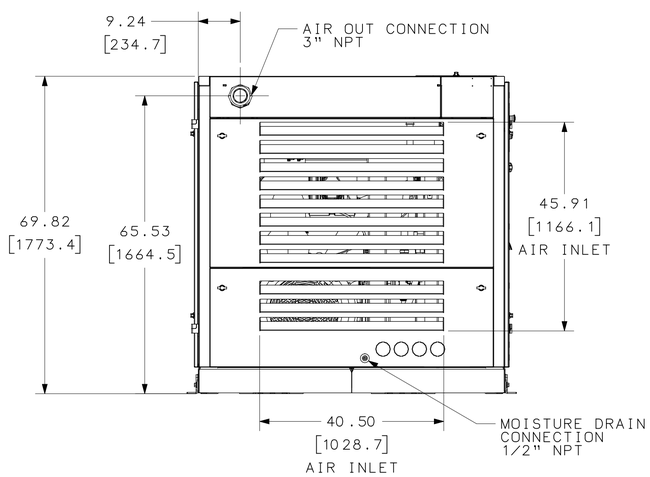


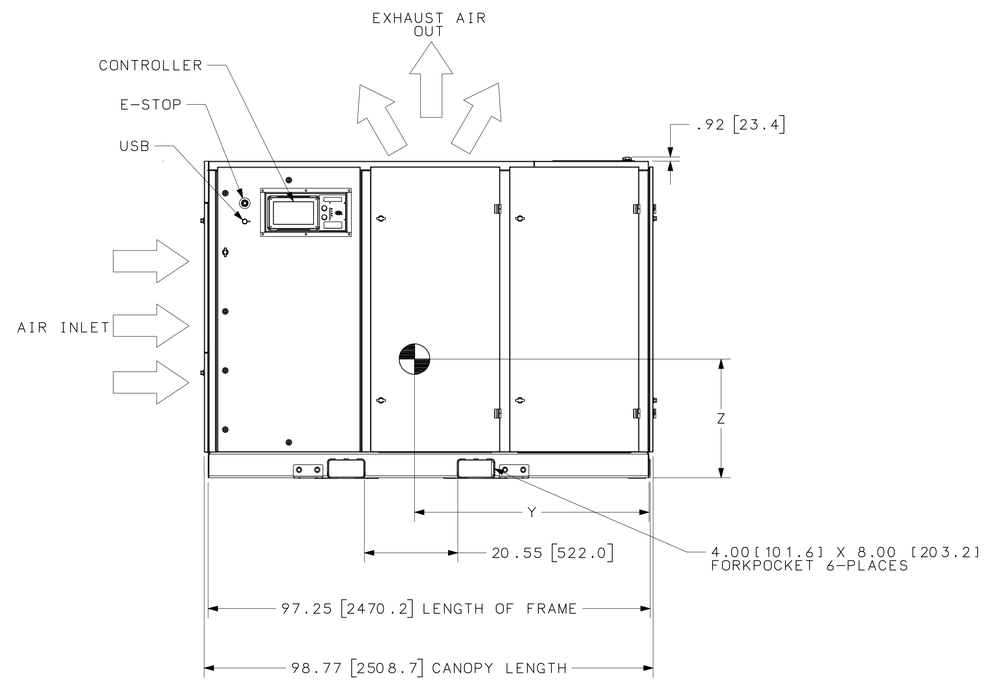


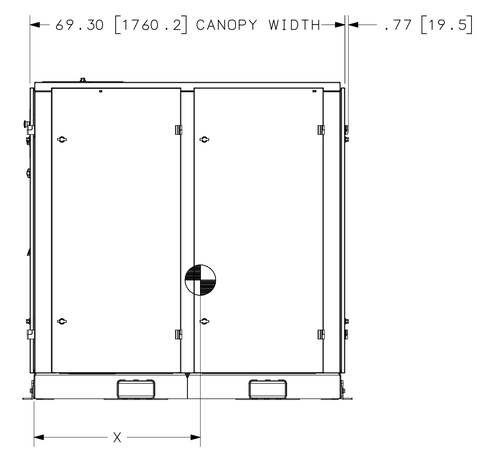


| MACHINE CHART | | | | CENTER OF GRAVITY (COG) | | |
|---|---|---|---|---|---|---|
| MODEL | MAIN MOTOR HP | WEIGHT | CFM COOLING AIR | X±2.0 | Y±1.5 | Z±0.5 |
| LS90 | 125 | 5830 lb [2650 kg] | 11,800 cfm [20,048 m3/hr] | 37.8 | 50.6 | 26.1 |
| LS90S | 125 | 5954 lb [2706 kg] | 11,800 cfm [20,048 m3/hr] | 38.1 | 50.0 | 25.8 |
| LS90V | 125 | 5908 lb [2685 kg] | 11,800 cfm [20,048 m3/hr] | 36.6 | 51.6 | 26.1 |
| LS110 | 150 | 6007 lb [2730 kg] | 11,800 cfm [20,048 m3/hr] | 38.2 | 51.7 | 25.8 |
| LS110S | 150 | 6161 lb [2800 kg] | 11,800 cfm [20,048 m3/hr] | 38.5 | 51.2 | 25.4 |
| LS110V | 150 | 6084 lb [2765 kg] | 11,800 cfm [20,048 m3/hr] | 36.5 | 52.7 | 26.0 |

| TOLERANCES UNLESS OTHERWISE SPECIFIED | | SULLAIR® A Hitachi Group Company | | MATERIAL | | |
|---|---|---|---|---|---|---|
| | | DESIGNED | ECA | FINISH SPEC | | ID, LS90/LS110 AC ENCL |
| ALL DIMENSIONS ARE IN INCHES | | DRAWN | ECA | WEIGHT | LBS | |
| ONE DECIMAL PLACE | ±.1 | ENGINEER | - | PROD CODE | X01B | DWG NO 02250231-211 REV 02 |
| TWO DECIMAL PLACES | ±.06 | STANDARDS | - | SHEET | 1 OF 1 | |
| THREE DECIMAL PLACES | ±.015 | SUPERVISOR | - | | | |
| ANGULAR DIMENSION | ±1.0° | MANAGER | - | | | |
| HOLE DIAMETER | ±.03 | DATE | 2017-03-27 | | | SIZE D |

THIS DOCUMENT IS THE PROPERTY OF SULLAIR. YOU MAY NOT POSSESS, USE, COPY OR DISTRIBUTE THIS DOCUMENT OR ANY PART THEREOF WITHOUT SULLAIR'S EXPRESSED WRITTEN PERMISSION. IMITATION OF DESIGN, MANUFACTURE OR REPAIR PARTS, OR OBTAIN ANY GOVERNMENT APPROVAL TO DO SO, WITHOUT SULLAIR'S EXPRESSED WRITTEN PERMISSION IS PROHIBITED. ANY INFORMATION YOU OBTAIN FROM ANY SULLAIR DOCUMENT CONSTITUTES SUCH PERMISSION. POSSESSION, USE, DISTRIBUTION OR DISCLOSURE BY ANYONE WITHOUT SULLAIR'S EXPRESSED WRITTEN PERMISSION IS NOT AUTHORIZED AND MAY RESULT IN CRIMINAL AND/OR CIVIL LIABILITY.

THIRD ANGLE PROJECTION