Production

SUBJECT TO EAR, ECCN EAR99 AND
RELATED EXPORT CONTROL RESTRICTIONS

REVISIONS						
SHEET	ZONE	REV	ECO NO	DESCRIPTION	DATE	REV BY
-	-	00	602445	PROCUDTION RELEASE	2021-11-15	KNF

NOTES:

1. CUSTOMER TO FURNISH FUSED OR CIRCUIT BREAKER DISCONNECT PER LOCAL CODES.
2. REMOVE JUMPER FOR AUXILIARY E-STOP STRING DEVICES.
3. BELDEN TYPE 9842 4 CONDUCTOR 2 TWISTED PAIR W/ SHIELD OR EQUIVALENT TO MATCHING TERMINALS ON NEXT COMPRESSOR FOR SEQUENCING.
4. SEE TRANSFORMER CONNECTION TABLE FOR PROPER VOLTAGE CONNECTION. TRANSFORMER FUSING ON CLIPS LOCATED ON TRANSFORMER X1/XF INTERNALLY JUMPERED. SEE TRANSFORMER FUSE CHART FOR SIZING.
5. REFER TO SEQUENCING AND PROTOCOL MANUAL.
6. SEE WIRING CHART FOR POWER AND MOTOR WIRING SIZE.
7. FAN OPTIONAL: NOT FURNISHED ON WATER COOLED WITHOUT CANOPY.
8. SET SWITCHES ON SVDR:
   SW1 = 0
   SW2 = 4
   SW3 = ALL TO 'ON' POSITION

HEATER OPTIONS

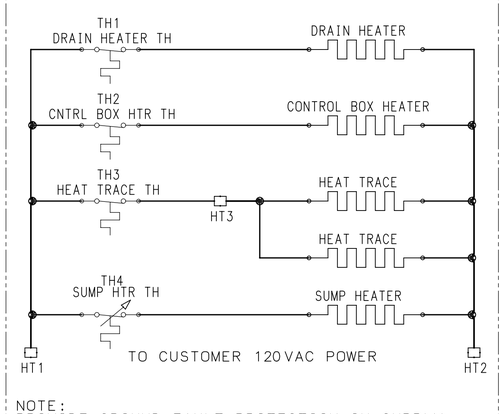

NOTE:
PROVIDE GROUND FAULT PROTECTION ON SUPPLY OF HEATING DEVICES PER LOCAL CODES

02250083-192 TRANSFORMER CONNECTIONS				
PRIMARY		SECONDARY VOLTS		
VOLTS	TAPS	XF-X2	XF-X3	XF-X4
208	H1-H2	85	100	110
220	H1-H2	91	110	120
230	H1-H2	95	115	125
240	H1-H2	99	120	130
380	H1-H3	91	110	120
400	H1-H3	95	115	125
416	H1-H3	99	120	130
440	H1-H4	91	110	120
460	H1-H4	95	115	125
480	H1-H4	99	120	130
500	H1-H5	85	100	110
550	H1-H5	91	110	120
575	H1-H5	95	115	125
600	H1-H5	99	120	130

02250261-688 TRANSFORMER CONNECTIONS			
PRIMARY			
VOLTS	SUPPLIED JUMPERS	SUPPLY LINES	INSTALL FUSE TO
220-240	NONE	2,6	UNFUSED
440-480	NONE	2,4	UNFUSED
550-600	NONE	2,3	UNFUSED
220-240	8-6	1,5	2-7, 5-8
440-480	4-8	1,5	2-7, 5-8
550-600	3-8	1,5	2-7, 5-8
SECONDARY			
VOLTS	SUPPLIED JUMPERS	SUPPLY LINES	INSTALL FUSE TO
110-120	NONE	2,4	UNFUSED
90-100	NONE	2,3	UNFUSED
110-120	NONE	1,4	2-7
90-100	NONE	1,3	2-7

COLOR ABBREVIATIONS	
BLACK	BK
BLUE	BL
BROWN	BN
GREEN	GN
GREY	GY
ORANGE	OR
PINK	PK
RED	RD
VIOLET	VT
WHITE	WT
YELLOW	YL
GREEN/YELLOW	G/Y

TRANSFORMER FUSE CHART		
VOLTAGE	PRIMARY FUSES	SECONDARY FUSE
460	3A	7A
575	3A	7A

POWER TERMINATIONS (LB. - IN.)	
USE 75C COPPER CONDUCTORS ONLY TORQUE POWER TERMINALS PER TABLE	
14 - 10 AWG	35 LB. - IN.
8 AWG	40 LB. - IN.
6 - 2 AWG	45 LB. - IN.
1 - 3/0 AWG	50 LB. - IN.

MOTOR WIRING CHART (GGC CABLE)		
MACHINE (HP)	460V	575V
LS90 (125HP)	4 AWG	4 AWG
LS110 (150HP)	2 AWG	4 AWG
LS160 (200HP)	1/0	1/0

TB1
601
601
602
602

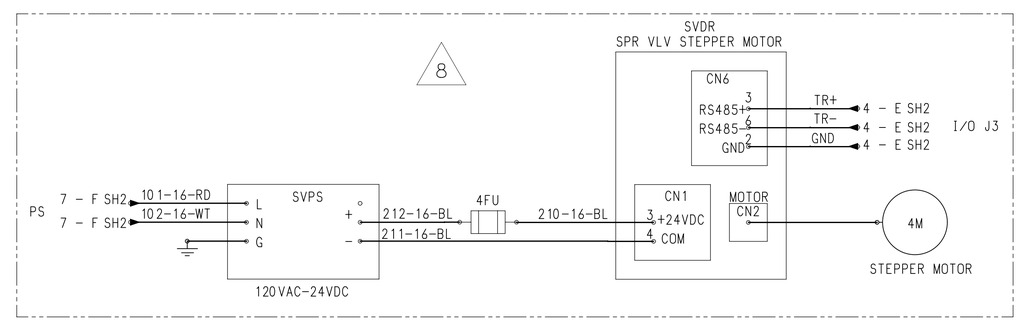

LEGEND

OPTIONAL COMPONENTS

CUSTOMER OPTION/PROVIDED

7 - A SH1 ◄ ► 7 - A SH1 ON/OFF PAGE CONNECTORS

WIRE CALLOUT = WIRE # - GAUGE SIZE - WIRE COLOR
GAUGE SIZE/WIRE COLOR NOT ON WIRE TAG

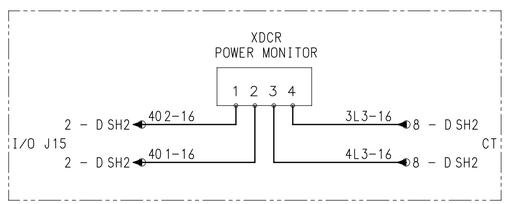

SULLAIR A Hitachi Group Company	MATERIAL		WD, YD 120VAC AC/WC LS90-160
DESIGNED -	FINISH SPEC		
DRAWN K.FOSTER	WEIGHT		
ENGINEER -	PROD CODE		DWG NO 1001-1167 REV 00
STANDARDS -	SHEET 1 OF 2		
SUPERVISOR -			
MANAGER -			
DATE 2021-11-15			THIRD ANGLE PROJECTION SIZE D

THIS DOCUMENT IS THE PROPERTY OF SULLAIR. YOU MAY NOT POSSESS, USE, COPY OR DISCLOSE THIS DOCUMENT OR ANY INFORMATION IN IT FOR ANY PURPOSE, INCLUDING WITHOUT LIMITATION, TO DESIGN, MANUFACTURE OR REPAIR PARTS, OR OBTAIN ANY BENEFIT, UNLESS SUCH USE IS SPECIFICALLY AUTHORIZED BY SULLAIR IN WRITING. WITHOUT PERMISSION, NEITHER RECEIPT NOR POSSESSION OF THIS DOCUMENT FROM ANY SOURCE CONSTITUTES SUCH PERMISSION. POSSESSION, USE, COPYING OR DISCLOSURE BY ANYONE WITHOUT SUCH PERMISSION IS UNLAWFUL. POSSESSION OR USE WITHOUT PERMISSION IS NOT AUTHORIZED AND MAY RESULT IN CRIMINAL AND/OR CIVIL LIABILITY.

Production

SUBJECT TO EAR, ECCN EAR99 AND RELATED EXPORT CONTROL RESTRICTIONS

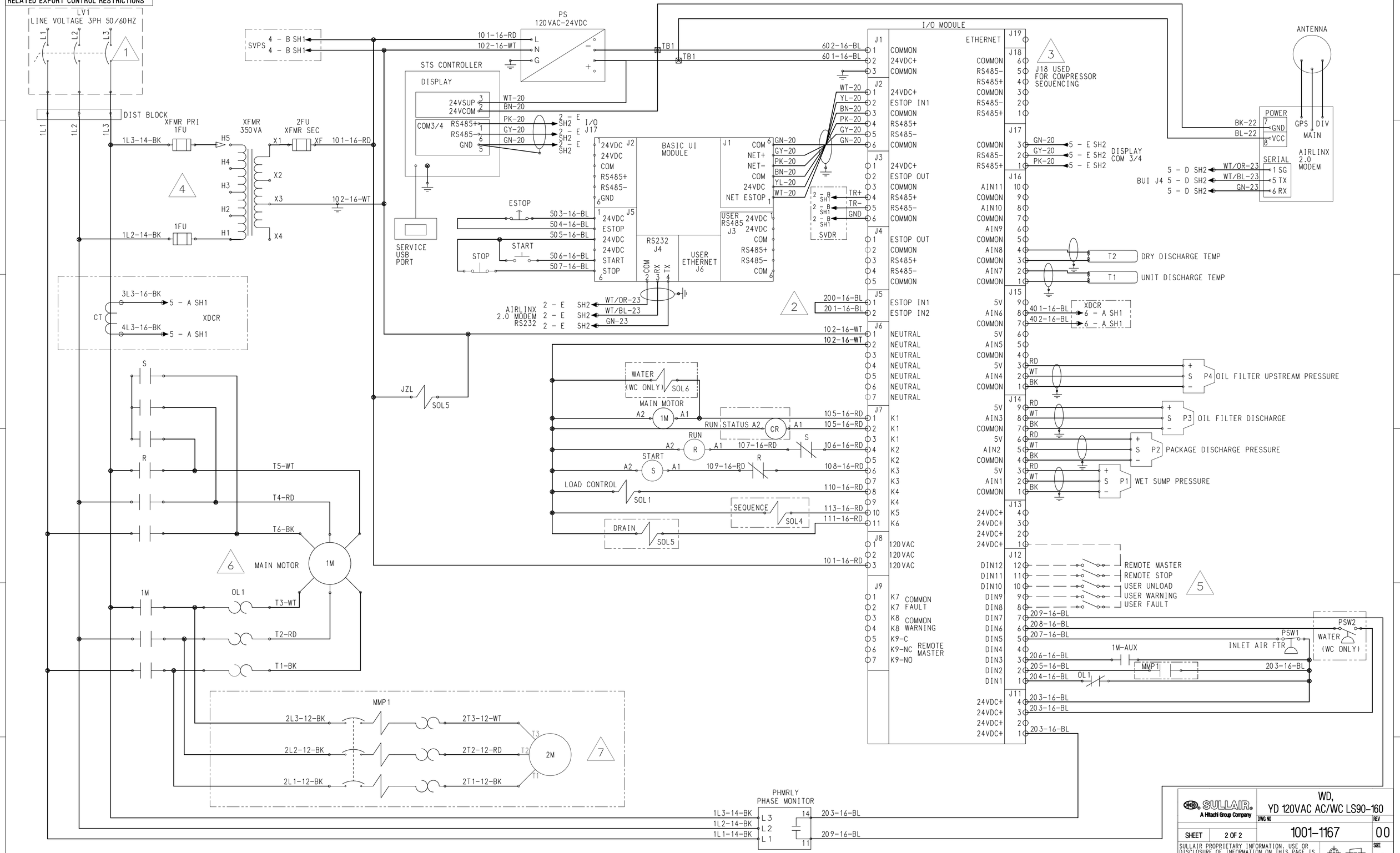

SULLAIR. A Hitachi Group Company

WD, YD 120VAC AC/WC LS90-160

DWG NO	REV
1001-1167	00

SHEET 2 OF 2

SULLAIR PROPRIETARY INFORMATION. USE OR DISCLOSURE OF INFORMATION ON THIS PAGE IS SUBJECT TO THE NOTICE OR RESTRICTIONS ON THIS DOCUMENT'S FIRST OR TITLE PAGE.

THIRD ANGLE PROJECTION

SIZE D